ENGINEERING TECHNICAL WHITE PAPER

XO20 Terminus Customer Use Cleaning Process

1. XO20 Terminus Overview

XiOptics's XO20 Terminus line of interconnects deliver dense high performance optical interconnects for single mode or multi mode optical fiber. The entire XO20 Terminus product line is based on a small form factor (SFF), 1.25mm zirconia ceramic ferrule technology as defined by Telcodia GR-326. XiOptics has uniquely packaged the SFF discrete ferrule architecture with a patented quarter turn rear release contact retention system. This marriage of industry standard optical features and proven terminus retention technologies enables XiOptics to deliver dense optical interconnectivity solutions while retaining individual fiber access for serviceability and reconfiguration of the interconnect.

XiOptics provides an ever-evolving product family built around the XO20 terminus concept. These solution have been integrated into various form factors to deliver solutions for interconnect requirements across box and board interfaces. As noted above, all of the products utilize the common XO20 Terminus optical terminus technology. The only physical variance in the optical components is the type of fiber specified for specific applacations. In all cases the terminus system allows for 60 degree sector tuning if desired (specifically intended for high performance single mode and angle polish applications). For more information regarding XiOptics products visit us on the web at www.xioptics.com. Our website also provides detailed information regarding the XO20 terminus system and its performance attributes.

The purpose of this manual is to provide proper instruction on the installation and removal of XO20 Terminus termini and to provide recommended cleaning instructions of the XO20 Terminus interconnect system.

2. Safety Precautions

Before installation, removal or cleaning of fiber optic connectors, the following precautions should be taken:

• Safety Apparel – insure that proper garment. Skin and eye protection are worn at all time to protect the individual from exposure to harmful conditions.

• Alcohol – Isopropyl Alcohol is very flammable and is harmful if swallowed, inhaled or absorbed through the skin. Keep alcohol away from heat, sparks or an open flame. Avoid contact with eyes, skin and clothing.

• Acetone – Do not use acetone to clean fiber optic connectors. Acetone will react with the protective polymer buffer coating on the fiber and may produce residues on the optical interface. In the case of plastic bodied connectors, acetone may react with the connector materials and degrade their performance or permanently damage the products.

• Fiber Handling – Use caution when unpacking and handling fiber optic cable assemblies to ensure that the cable is not bent beyond the minimum bend radius, typically one (1") inch for single mode fibers. Dust caps should remain in-place during all handling and only removed immediately prior to coupling.

• Laser – Never view an energized optical cable with the naked eye or an optical magnifying instrument. Serious damage to the eye could occur. If inspecting the end-face of a connector with a handheld fiber microscope, be absolutely certain that the system is deactivated. XiOptics recommends the use of fiber video scopes to minimize this potential danger.

3. Insertion & Removal of XO20 Terminus Termini

This section will detail the insertion and removal of XO20 Terminus termini. Use of insertion and removal tools is invariant regardless of product configuration. Access to termini for insertion and removal should always be made clear of obstructions prior to removal or insertion to prevent damage to terminated optical termini.

Technicians with knowledge of the optical cable products should perform XO20 terminus removal. It should be noted that although optical fiber is extremely durable, minimum bend radii should be maintained even during handling operations to prevent damage to fiber coatings or the silica glass itself. All XO20 Terminus connectors are designed to allow terminus cleaning and insepction without removal from the main connector body. XiOptics recommends all our customers attempt to maintain the terminus within the connector bodies prior to removal. The processes below provide guidance to cleaning and inspection with the terminus both installed within the connector and removed from it. To reiterate, all products using the XO20 terminus system include the ability to remove termini for cleaning, inspection, repair or reconfiguration but care of sensitive optical fibers must be maintained during all manual operations and careful reading of this bulletin is recommended.

3.1 XO20 Terminus Optical Termini

Any XO20 terminus based optical interconnect product will have a circular hole through which the optical fiber is intended to pass. At the side of the circular hole will be a small secondary passage. This passage is intended for the terminus indexing boss to be inserted and then oriented within the connector. The figure below illustrates the XO20 terminus. As the figure shows, there are three major segments within the terminus. The 1.25mm ceramic front section, the metallic press body attached to the terminus with its integral 60 degree sector tuning feature and the indexing sleeve. The indexing sleeve is used to properly orient the terminus within the connector body to assure proper orientation of the tuning features, the small boss on the side of the terminus also provides the features which lock the terminus into the connector housing. The elegant simplicity of the XO20 terminus system is what sets it apart from other interconnect systems. The terminus does not utilize clips or tines to retain it within a connector. These fragile connector pieces are easily damaged during connector maintenance operations and often cause “hanging” or improper installation of termini. The XO20 Terminus system uses the spring that is integral to the terminus structure to retain the optical terminus within the connector. When properly installed the orientation boss is captured within a pocket within the connector structure. The boss is retained within the pocket by the spring force created during terminus installation. The boss not only orients the terminus but also acts to assure proper installation by providing a visual clue that the terminus is installed correctly. The visual indication is the physical location of the rear of the terminus relative the connector body real plate. This will be illustrated below.



XO20 Terminus

The XO20 terminus has a small hex section at the rear of the terminus. This hex is used during factory fabrication to tune the optical terminus. Typically this is required in the production of high performance single mode termini. In other applications the tuning feature is used to orient the terminus for Angle polish termini. Care must be taken to not hyper extend the terminus and rotate the hex to any flat location other than that initially set at the factory. The terminus is designed to prevent improper rotation as long as the fiber attached to the terminus body is not “pulled” on during removal. This action should be refrained from unless a terminus is jammed within a cavity as it puts undue stress on the optical fiber. The terminus body should easily “eject” from the connector body due to the internal spring on the terminus. This will only occur once the indexing boss is aligned with the indexing boss slot.

3.2 Insertion of XO20 Terminus Termini

Using the XO20 terminus insertion/removal tool (XiOptics P/N M81969/14-02), place (red end) the tool over the fiber by pushing lightly on the fiber jacket with the split side of the tool. The plastic tool wall will open and allow the tool to extend over the terminus body. Once over the body, orient the split side of the tool such that it is aligned with the index boss. The index boss will engage the slot and allow the user to push the terminus and tool into the cavity and then rotate it once properly positioned. With the tool properly in- place over the terminus position the assembly such that the terminus is positioned to enter the rear cavity access hole in the connector. Be sure to align the orientation index boss with the secondary hole along side the main terminus cavity. Slide the tool and terminus into the hole until the tool and terminus bottoms out. Rotate the tool approximately 30 degrees in a clockwise direction so that the indexing boss is fully rotated under the retainer plate undercut (it is not possible to over-rotate the terminus as the terminus will stop rotation once it is properly oriented). This allows the terminus to couple itself directly with the connector body once the insertion tool is removed from the cavity. Grasp the tool handle and firmly pull the tool straight out and away from the connector body. The tool is designed to allow terminus to remain in the connector body. Proper seating of the terminus will be evident by the slight rearward movement of the terminus as the tool is removed. This movement is the indexing boss engaging the undercut slot inside the connector. At this point the XO20 terminus is fully installed into the XiOptics connector and it is properly aligned for optimal performance.

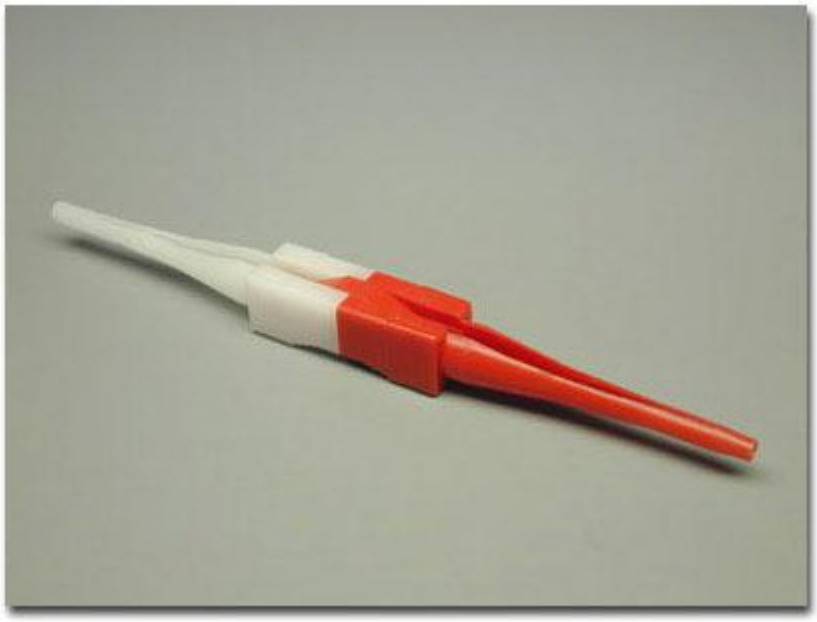

M81969/14-02 Insertion/removal tool, note slot along edge of tool designed to engage terminus orientation “boss”

3.3 Removal of the XO20 Terminus Termini

To remove the terminus, the 'white' side of the insertion tool (XiOptics P/N M81969/14-02), must be aligned with the terminus retention boss below the back plate of the connector. This is achieved by routing the optical fiber inside the slot in the tool. The tool is then slid along the optical fiber until it aligned perpendicular to the rear of the connector cavity holding the terminus. The tool is then pushed into the cavity while rotating it (slot of extraction tool should be approximately 30deg clockwise from visible secondary cavity). The tool will push forward when the slot is properly aligned with the boss. Once the slot is engaged with the boss removal of the terminus is accomplished with a simple push and twist. The tool is pushed into the connector back plate, once it is fully depressed the internal boss is free to rotate. By rotating the entire assembly (terminus, fiber and tool) approximately 30 degrees counter clockwise the terminus orientation/retention boss will be visible in the secondary cavity machined into the rear plate. At this point by pulling the tool directly away from the connector body the terminus and tool will be removed from the connector. XiOptics recommends care when handling the terminus and optical fiber. End face damage can occur with any hard surface contact. Fiber damage can occur with any excessive bend put into the fiber assembly. In all cases off axis pulling of optical fiber can damage fiber at the exit point from the terminus body, technicians should be trained to prevent this occurrence.

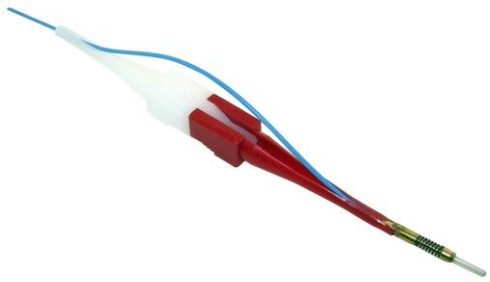

Tool Inserted Onto Terminus Loaded Ready for Removal

4.0 XiOptics Connector Preparation For Cleaning and Repair

XiOptics connectors are manufactured in a large variety of configurations. Terminus removal and insertion is identical for each application. However, each connector has slightly different characteristics to gaining access to the terminus. The following sections identify how to manage each connector configuration for gaining access to the termini. It should be noted that every XO20 Terminus connector configuration is designed to allow mass cleaning of optical termini without their removal from connector bodies. Connector components are compatible with alcohol as a cleaning agent. XiOptics's recommend cleaning procedures will be covered at the end of this document.

4.1 LC2 Connector

The XiOptics LC2 connector system is designed to remain extremely durable in all environments. It is possible however to remove the XO20 Terminus for cleaning or inspection external to the connectors. This can be extremely helpful if contaminate has gained access to the terminus cavity. All components including the cavity can be cleaned using the XO20 Terminus system and this is one of the key advantages to the system in the field. This is accomplished by removing the rear body of the connector housing. The housing is designed with a standard right hand thread to retain the crimp/strain relief. By simply turning the crimp ferrule retainer collar counter clockwise relative to the rectangular body the rear of the connector can be removed. As the collar is rotated the entire cable, strain relief and crimp assembly will move away from the main connector body. The internal features of the terminus will become exposed. Once removed XO20 Terminus optical terminus will be fully exposed including the tuning features and spring. Removal of the terminus is performed by pulling the terminus straight back from the terminus body. If a fiber cable is attached, tuning will not be impacted since the tuning features are retained as an integral part of the terminus system and are independent of the connector body.

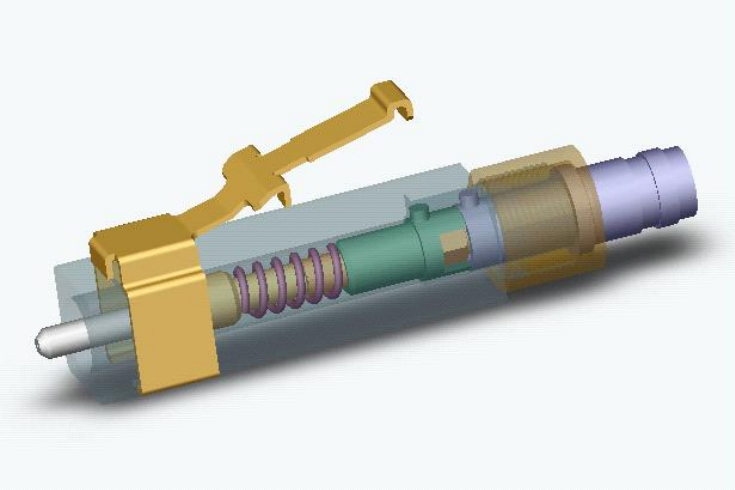

Components of the LC2 connector assembly.

Cleaning of the connector is extremely straightforward. Using the instructions provided below either wet or dry methods may be employed to clean the connector components. If the connector housing is extremely contaminated XiOptics recommends that it be ultrasonically cleaned using an appropriate film free cleaning solution such as laboratory grade isopropyl alcohol. XiOptics's Customer Care Processes Bulletin 2 will help with the detailed methods of cleaning and inspection criteria if additional information is required or if inspection shows end face damage.

4.2 LC38999 Connector

5.0 Cleaning & Inspection of XO20 Terminus Termini

A key feature of XiOptics connector family is the concept for ease of removal and ability to inspect and clean single termini within a high-density fiber optic interconnect. This can typically be accomplished with the connector in either a mated or unmated condition. XiOptics recommends demating or as a minimum relaxing spring pressure on the connector prior to terminus removal. This will prevent potential endface damage as the terminus is rotated for removal. Specific information regarding how to perform repair of single channels in a mated configuration should be referred to a product specialist at specialist@xioptics.com .

The following procedure will instruct the user on how to inspect and clean the XO20 terminus once it is removed from the connector. Please refer to sections 3 and 4, when terminus removal is required.

5.1 Inspection

The optical performance of fiber optic interconnects is very susceptible to environmental contaminates such dust, lint and oil/grease from fingers and hands. To achieve optimal optical performance, it is imperative that termini be clean prior to installation to prevent contamination of terminus cavities within connectors. Cleaning should be performed on both halves of the interconnect as a dirt from one half will immediately transfer to the other half upon mating. Utilization of the following cleaning procedures will aid in assuring this and minimize the potential for damage to sensitive fiber end faces.

WARNING: Never view an energized optical cable with the naked eye or an optical magnifying instrument. Disconnected or separated optical connectors may emit invisible laser radiation and direct exposure can severely injure the eye. If inspecting the end face of a connector with a hand held optical instrument other than the remove viewing instruments that XiOptics recommends be certain that the system is deactivated and all light sources are fully disabled.

5.2 Single Terminus Inspection

Inspection of the XO20 Terminus optical terminus is recommended using a non- direct viewing system such as those developed by Westover Inc. As a joint development activity with Westover Corp. (www.westoverscientific.com) XiOptics provides adapter heads for Westover's portable 4" LCD inspection unit and its bench top inspection units. Adapters allow either viewing of loose termini or in-situ viewing of termini while recessed within sleeve assemblies or installed within connectors.

One of the nice features of XiOptics's optical terminus technology is that it is based on Telcordia specification Small Form Factor technology. If the suggested equipment is not available, a 1.25mm MU or LC viewing scope can typically be used from any manufacturer. The recessed tip viewers can be used to view termini end face while they remain in the ceramic sleeve assemblies. Caution should be taken to assure the end face of the termini does not bottom on any hard surfaces within any viewing system selected. Minimum magnification recommended is 200X. XiOptics recommends that any personnel inspecting the quality of terminations or contamination in the field be provided a short training course on visual inspection criteria. XiOptics's technical staff can provided an internal course directed at that.

5.3 Inspection Criteria

The pictures below provide information regarding what XiOptics considers not acceptable for free floating/loose contaminants. No floating contamination/particulate is allowed in regions A, B, C, or D. Floating particular is matter that is not attached to the surface by adhesion or surface bonding. Floating contamination can easily move from non-restricted to restricted regions during interconnect handling and mating.

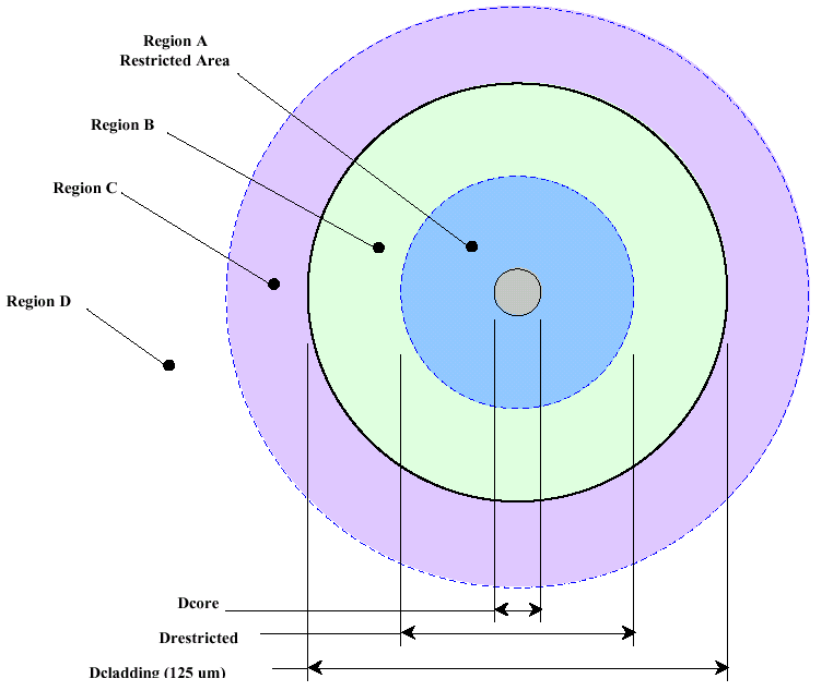

Contamination must be removed by cleaning of the connector end face. If the contamination cannot be removed, for more information please contact the XiOptics factory to receive a copy of XiOptics's more detailed cleaning and end face evaluation bulletin. Customer Use Inspection, Customer Care Bulletin 2. specification

5.4 Cleaning Procedure

XiOptics based connectors are designed to allow mass cleaning of XO20 Terminus termini. This can typically be accomplished by mass washing and drying of connectors using agents such as isopropyl alcohol. Mass cleaning is typically performed in-place within equipment and other support equipment. As such, XiOptics cannot provide detailed instructions for mass cleaning. XiOptics will work with any specific application to determine a preferred mass cleaning methodology and provide documentation to support specific customer implementations. The following instructions are general cleaning procedures for use with any XO20 Terminus optical terminus solution and are typically intended to be used when the terminus is removed from the connector body. In some cases the procedures can be used while the terminus remains in-place, however, care must be exercised to not move contaminates from one location to another within a connector housing.

5.5 Dry Processing

The first step of any cleaning activity is to try and dislodge any particulate matter using compressed gas exposure of the terminus. It is critical to completely remove particulate matter and not just move it to another location on the terminus. For loose particulate use a can of moisture free compressed air or dry nitrogen, or equivalent to blow the particulate matter from the end face. Holding the XO20 terminus with the index sleeve assembly in a horizontal position and using the other hand to activate the compressed gas system accomplishes this. Keep the nozzle of the air source also horizontal to blow contaminates away from the terminus not along its length. First, clean all possible contaminates from the spring area of the terminus. This is accomplished by blowing air across the spring and main body of the terminus. In the final stages of dry cleaning move the nozzle of the air dispenser toward the ceramic portions of the terminus and ultimately to the tip itself.

Re-inspect the end face, per the above criteria, to ensure that the end face is clean and free of loose particulate matter. If all contaminates have been removed, the terminus can be reinstalled into the connector. If contaminates remain, move onto the next section of this cleaning procedure. Detailed microscopic evaluation of the condition of the end face must be accomplished at the end of each cleaning sequence. Do not mate termini until it is certain contaminates have been removed.



Dislodge particulate matter using compressed gas.

5.6 Wet/Dry Process

If the above-described dry process does not remove the particulate, XiOptics recommends following the wet process be used to clean the optical terminus system:

5.6.1 From a capped isopropyl alcohol dispense with an embedded “Luminex” cleaning fabric (Luminex is the trade name of a lint free, non-woven wip material, these cleaning materials are available from Fiber Instruments Sales, information is available under the partners section of www.xioptics.com). Push the dispenser cover down one or two times pumping 99.9% instrument grade isopropyl alcohol into the reservoir wetting the Luminex fabric. Care should be taken not to over saturate the fabric, which will cause the alcohol to over fill the reservoir and drip down the side of the container.

5.6.2 Grasp the XO20 terminus body and place the terminus ceramic ferrule end face perpendicular to the cleaning fabric. Lightly press the connector end face into the fabric and move it in a figure ‘8’ pattern three times. Remove the XO20 Terminus end face from the fabric and immediately proceed to the ‘Dry’ cleaning process that follows next.

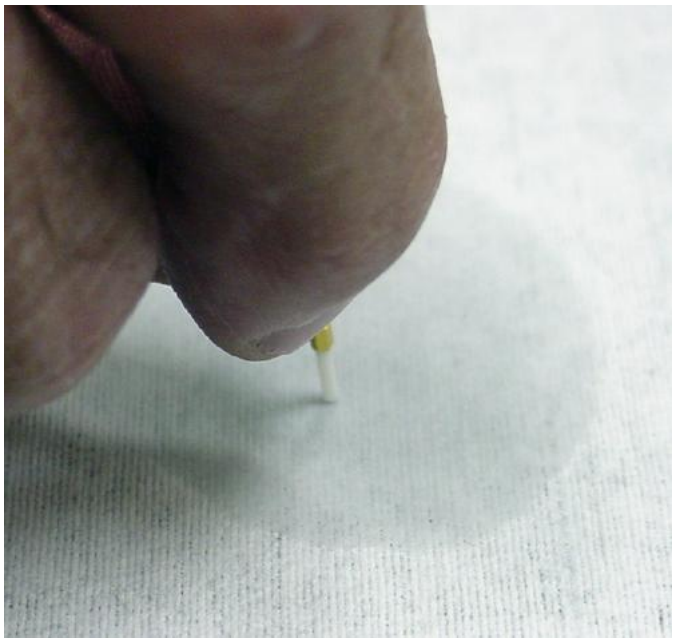

Wet Cleaning

5.6.3

XiOptics recommends the use of CLETOP brand cassette cleaners for use with XO20 Terminus optical termini. With a terminus in one hand, hold the CLETOP cassette cleaner in the palm of the opposite hand. With the cassette shutter door facing up, rotate the cassette lever all the way down with your thumb. Do not release the lever, since the lever advances the 'dry' luminex cleaning fabric tape inside the case and simultaneously opens the shutter. The CLETOP cassette shutter door is now open exposing the luminex fabric.



Dry Cleaning

• Hold the XO20 terminus body firmly and lightly press the connector ferrule end face perpendicular against the cleaning tape, in the rectangular opening of the cleaner and move it in a three (3) times along the length of the window, do not retrace the path, use three (3) individual strokes.

• Be sure the ferrule is pressed snugly against the cleaning tape while moving the ferrule to assure proper cleaning action.

• Release the cassette lever allowing the shutter to close to its initial position.

* Note – The CLETOP cleaner may also be used as a 'wet' solvent cleaner by applying (1) drop of alcohol to the exposed tape from a single drop applicator. Slightly wet the tape surface and clean per the 'wet' process in 5.6.1. Index the cleaner to a new clean position and follow immediately with the 'dry' process in 5.6.3.

5.7 Cleaning Verification

After cleaning the terminus, inspect the ferrule end face to ensure that it is free from any particulate contamination using the inspection criteria provided above in section 5.4 and 5.3.

When the terminus has been verified as clean, the XO20 terminus can be reinserted back into the connector body or immediately capped for storage. If the terminus is capped be sure cap is clean and dry prior to application. Only utilize XO20 terminus caps supplied by XiOptics as they are specifically designed to prevent end face damage due to cap impact.

5.8 Cleaning XO20 Terminus Termini Through A Ceramic Sleeve

If the ceramic pin of the XO20 terminus is not accessible for removal or cleaning directly, then there will be a need to clean the terminus through the ceramic split sleeve.

5.8.1 Inspection - Using the Westover remote viewing scope, insert the probe end into the connector and verify if cleaning is needed.

5.8.2 Cleaning Stick - If the terminus needs cleaning, then use the CLETOP cleaning stick for 1.25mm LC connectors. This stick has a porous tip whose intent is to pick-up contaminates. This stick will not function on liquid or grease contaminates, it will smear grease and further contaminate the terminus surface. The standard 1.25mm tip is compatible with the entire

XiOptics connector product line. In the case of tune termini it is possible to push the terminus far enough rearward to disengage the tuning features. Care must be taken during this operation to not disengage and then rotate termini within the housing as this could de-tune the terminus. In non-tuned termini it is acceptable to disengage the tuning features however, care must be taken to not “wind-up” optical fiber during cleaning.

• Wet Process – Dampen the stick cleaner with Isopropyl alcohol from the solvent dispenser. Insert the stick cleaner into the adapter, rotating the stick 360 degrees, for a minimum of three times. Carefully remove the stick cleaner, rotating it upon removal.

• Dry Process – Using the above CLETOP stick cleaner, insert the stick cleaner into the adapter, rotating the stick 360 degrees, for a minimum of three times. Carefully remove the stick cleaner, rotating it upon removal.

• Inspection – Re-inspect with the fiber inspection probe to determine the effectiveness of the cleaning.

6.0 Alternative Connector Cleaning Process

The following alternative cleaning procedure is acceptable for field service/installation activities, when a minimum number of the connectors are to be inspected and cleaned and the solvent cleaner, the CLETOP cassette cleaner and the video inspection system are not available:

6.1 Inspect the connector to be clean for the degree of cleanliness using a suitable handheld optical microscope. Caution: verify that the connector and fiber to be inspected has been de-energized before viewing. Determine the condition of the connector as in section 4.

If the end face is badly scratched or broken, it should be replaced. If there is a heavy ‘baked on’ circular contaminate buildup around the ferrule, it may have to be re-polished before cleaning. If the end face is lightly contaminated, the ‘Wet/Dry’ procedure is recommended.

6.2 Open an individual foil packet of pre-saturated Isopropyl alcohol wipes, such as Chemtronics Optic Prep or equivalent. Hold the XO20 terminus or the cable connector, perpendicular to the cloth and drag it against the wipe three (3) times in a figure eight pattern. This action applies the alcohol solvent to the end face and initially loosens and scrubs away organic/solid contamination. Proceed to the ‘dry’ method next.

6.3 With a Luminex dry cleaning cloth, such as FIS non-woven dry wipes, wrap it around the ferrule and rotate the connector housing, cleaning the outside periphery of the ferrule. Follow this by folding an unused portion of the cloth over the end of the ferrule end face and then with light pressure, slightly drag the cloth from the center of the ferrule to the edge while rotating the connector through 360 degrees.

Re-inspect the connector for cleanliness. If necessary, repeat the cleaning process.

Appendix – Equipment List and Ordering Info.

ITEM

XO20 Terminus Optical Terminus Insertion/Removal Tool

Hand held automatic terminus cleaner (CLETOP)

Luminex Woven Film Cartridge

Wipes, 4” x 4”, 100 pack 1.25mm Swabs

Isopropyl Alcohol Dispenser

Cleaner, Air Spray Can

Adapter, Single Channel Viewer, Male Tip, Westover Portable

Adapter, Single Channel Viewer, Male Tip, Westover Benchtop

Adapter, Single Channel Viewer, Recessed Tip, Westover Portable

Materials can be either ordered direct from XiOptics LLC or its partners. Contact us at www.xioptics.com for additional information regarding these materials.