ENGINEERING TECHNICAL WHITE PAPER

XO20 Terminus Technology

XiOptics LLC's Optical Terminus System Review and Comparison to MT Ferrule Products and Other Multichannel Optical Interconnects

What is XO20 Terminus? A good question. XO20 Terminus is a Small Form Factor (SFF) optical terminus system developed by XiOptics. It has been introduced to the market as alternative to other optical interconnect solutions that cannot deliver either the level of optical performance or reliability required in todays advanced systems. Specifically, XiOptics's XO20 Terminus product is intended to address industry segments where optical interconnect density is crucial to successful packaging of a system however application environments or optical performance exceed the known limitation of MT ferrule technology or other industry standards such as Mil-T-29504.

The XO20 Terminus optical terminus system has been developed over the past two years in response to increasing demand for a next generation optical terminus to the replace to augment current Mil-T-29504 products. The technology introduced by XiOptics is advanced enough that it also offers an attractive alternative to MT ferrule based products where design combined with performance is a must. XiOptics began terminus architecture studies in late 2001 when it was noted that several manufacturers were attempting to position MT ferrule based products into high density, high performance, mission critical single mode fiber interfaces. When OEM's were queried why MT ferrule solutions were selected the general response was that multi-channel solutions were required that were more cost effective or more densely packaged than current commercial LC products or military Mil-T-29504 products. Further, the OEM's saw a growing need to drive superior optical performance and enhance field serviceability and maintainability. XiOptics research showed that this market demand was not being addressed by any of the major fiber optic interconnect manufacturers and hence a development the XO20 Terminus project was undertaken.

The target customers for the XO20 Terminus optical terminus system are those who have used MT ferrule product from various connector OEM's and have found that insertion loss performance was either inadequate or unstable in the anticipated multi-mate or environmental conditions. These customers will have identified that the plastic MT ferrule substrate become dimensionally unstable at the alignment pin engagement hole in as few as 20 mating cycles. For single-mode fiber applications this is not acceptable for telecommunications grade equipment where line cards could be exposed to mating cycles in excess of 100 during the lifetime of the equipment. In industrial and military aerospace applications this is not acceptable in equipment exposed to severe environments with lives that may span multiple decades. The other targeted customers for the technology are those who have outgrown the capability of the multi- decade old Mil-T-29504 products. These products are fit into electrical interconnect packaging schemes and are well known to deliver very poor optical performance stability. Fielded aerospace systems using Mil-T-29504 architectures are known to experience over 1 db of channel to channel performance variation. Acceptable for older low performance systems but nearly impossible to maintain in todays multi-channel environment. In addition XO20 Terminus is targeted at those customers who require potentially true APC (angled physical contact) return loss performance or truly stable, sector tuned single mode performance.

Over the past 4 years OEM's who were fast first movers in the optical industry were finding that cable management was a significant issue. They had originally selected ribbon architecture cables or multi-channel Mil-T-29504 for the dense packaging offered. As time moved forward and systems progressed into production they had found that damage to a single fiber channel within a multi-channel connector caused rejection of the entire multi-channel cable. The impact of this was that although the MT ferrule solution connectors were dense and relatively low-cost to install, over the manufacturing cycle of equipment they introduced a severe repair cost that was unacceptable within these potentially multi-hundred channel

systems. In the case of Mil-T-29504 they found that the high cost of the product was becoming a driving cost element in the overall build of systems. Since Mil-T-29504 was built upon a low volume production ceramic ferrule/sleeve architecture removing costs were nearly impossible and hence a single mated channel could and still does cost over $75 in medium volume.

Subsequent to initial customer discussions and the development of a quality function matrix XiOptics undertook the development of the XO20 Terminus technology as an alternative technology to address the following basic design guidelines:

• A small form factor optical terminus that could be scaled upward to 500 optical pathways in a single connector solution.

• A terminus integration approach that allowed for fiber channel density equal to that currently found in MT ribbon architecture yet provided single channel service, maintenance and repair capability.

• A terminus whose performance could grow to meet emerging requirements of extremely low insertion loss, low return loss and even polarization maintaining capability.

• A commercially viable terminus that could deliver all of the objectives listed above with commodity market competitive costs on a per channel basis .

The relationship with multi-industry customers positioned XiOptics to provide all of the needed development personnel with the partner OEM's identifying system integration issues to assure the most beneficial solution to the market. XiOptics further teamed with a number of leading support equipment suppliers within the optical industry to be sure proper inspection, test and maintenance equipment was available for the XO20 Terminus product structure.

XiOptics spent several months evaluating competing technologies. The goal of this was to determine the most stable platform to base any new optical terminus upon. Initially, XiOptics began investigating a ribbon fiber, or MT ferrule, interconnect solution. A detailed theoretical analysis of the geometry of MT ferrule approach lead to several conclusions. First, the nature of the conjoined fiber structure within MT ferrules precluded any type of individual channel service or maintenance. Further, it was determined that if the market desired a solution with minimal variance in channel-to-channel performance an MT ferrule solution had little hope of delivering that goal.

There are three significant components within a ribbon or parallel optic interface.

1) The plastic MT ferrule and its mating plastic fiber carrier

2) The optical fiber

3) The alignment features

Optical interconnect performance and stability of the interface are driven by a manufacturers ability to control the quality of these components, their assembly and their engagement characteristics. In XiOptics's investigation, the optics team assumed that the components available for MT interconnect products were commodity items. Hence, processing or implementing specialized component selection techniques could only drive the ability to impact performance and durability. In evaluating the MT connector designs available on the market XiOptics found that typically the alignment features were two metallic pins that are precision coupled to one half of the ferrule structure. On the other half, the ferrule structure is carried in a plastic body and the metallic pins are precision coupled into plastic guidance holes. During durability testing XiOptics found that wear of the plastic receiver caused misalignment of the interconnect and subsequently degraded performance with each successive mate. XiOptics's research was subsequently validated by other industry leaders such as Stratos Lightwave who published an article in Fiber Optic Product News in May of 2001 identifying the same performance stability issue with MT ferrule based products. XiOptics extrapolated the performance degradation noted for multi-mode product. It was determined that the 2-3 micron of misalignment leading to 0.2 to 0.4 dB degradation of insertion loss performance in multi-mode 62.5 micron core fiber could lead to 0.7 to 1.0 dB of insertion loss degradation in 9 micron core single mode product. This tremendous degradation in performance over a relatively short durability cycle period (as few as 20 cycles in room temperature environment) degraded XiOptics's confidence that MT or any parallel optic solution was a workable solution for the product intended to be brought to market.

XiOptics's goal of using MT ferrules as a basis for an extremely low insertion loss interconnect solution that was applicable to multiple markets was further degraded when a deep investigation of other Small Form Factor (SFF) interconnects per Telcordia GR-326 was completed. The issue that seemed insurmountable with MT ferrule technology dealt specifically with the interconnect's basic ability to accurately align optical waveguide cores (specifically single mode cores) in a repeatable manner. This issue was brought to focus when XiOptics investigated Lucent's market leading development path for the LC interconnect product to determine what enabled this cost leading optical interconnect to surpass the performance of so many of its peers. What XiOptics determined was that optical insertion loss within any interconnects is driven by a number of factors. The primary contributors included; the concentricity of the ferrule, the concentricity of the fiber, stability/compatibility of construction materials, end-face geometry and the fit of the fiber into the ferrule. Lucent's approach to its LC SFF solution was to utilize discrete ceramic ferrules, aligned with discrete split ceramic sleeves. By using a reduced geometry all ceramic solution the variances due to tolerances were reduced and the variance due to material incompatibility were reduced. Issues such as thermal distortion of the interface found in MT product were removed in Lucent's LC product. Further, the ability to put a full spherical dome on the tip on each fiber versus a gang angle polish as found on MT ferrules delivered a higher performance optical interface. The dome formation provides a superior optical interface by better matching waveguide interfaces. Discrete springs compress the discrete fiber cores in a LC interface to control fiber deflection on a single channel basis versus bulk basis within MT. Further, the non-angle polish end-face is more robust solution in severe vibration environments because alignment forces causing scrubbing across the interface are removed.

To provide a truly differentiated solution within the LC interconnect Lucent determined there was a need to deliver a connector that was designed from day-one with an ability to actively align the optical waveguide core of the fiber. The importance of this was particularly important because active alignment addressed those insertion loss variables caused by tolerance stacks ups and not caused by materials issues. Specifically, the tuned contact system dealt with the "real world" issues of ferrule concentricity, fiber concentricity and finally fiber-fit into the ferrule hole. The impact of these tolerance studies was amplified when consideration was taken of random orientation versus preferred orientation of fiber waveguide core offsets. Within the LC interconnect "tuning" of the connector is performed by determining where the offset of the optical core of the fiber is and then positioning this offset within a 60 degree sector. This alignment essentially negates all of the "uncontrollable" noise factors introduced by the materials of manufacture. Figure 1 illustrates the example being discussed.

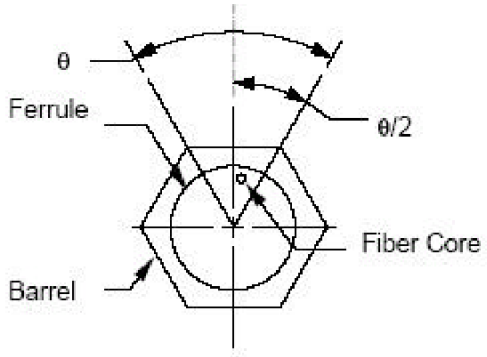

Figure 1: Core Offset Placement For Optimal Optical Performance

With Lucent's approach for the LC interconnect it was obvious that the maximum core off-set within a connector could be easily determined by the sort criteria established against a perfectly centered "golden" cable. The tuning operation not only limits the maximum insertion loss relative to a "golden" cable but it also limits the maximum insertion loss relative to any other random mated interconnect to that same acceptance limit (refer to the figure above). This yields what some optical systems such as WDM equipment require which is truly stable random mate channel-to-channel performance. As XiOptics reviewed the MT ferrule products it became critically obvious that tuning would not be possible because of the methodology

used within the ferrule structure to couple the fibers. Within any other terminus system currently manufactured to an industry standard such as Mil-T-29504 there weren't provisions within the connectors to allow for tuning. In both cases random mate performance would always be a significant variable. Although perhaps acceptable for multi-mode fiber this would never be acceptable for a single mode product intended to be an industry standard for decades into the future. As a result of the analysis and research efforts summarized above XiOptics selected the 1.25 mm zirconia ceramic LC/MU ferrule architecture for its XO20 Terminus products and set out to find a method to make that architecture significantly more robust in severe environment and enable more dense packaging.

XiOptics finalized its decision to utilize the 1.25mm architecture was correct when a thorough review of support equipment such as test adapters, cleaning solutions and polishing equipment was completed. It was quickly determined that most of the existing infrastructure in industry could be utilized to support the XO20 Terminus product if properly design to enable the use of standard adapters. This was determined to be critical because XiOptics desired to minimize investments required by customers desiring to move toward a XO20 Terminus solution.

With all of the information gathered and analyzed XiOptics's design teams quickly undertook a path of significantly modifying the Mil-T-29504 style optical terminus to incorporate the needed features to future proof the contact system under development. By coupling knowledge of past Military/Commercial aerospace optical termini with Lucent's work on the LC XiOptics believes that the technology patented within the XO20 terminus system has the potential to revolutionize the solutions available for specialized, demanding optical interconnects across all markets.

XiOptics's engineering and marketing personnel have been involved in the optical revolution that we have witnessed since late 1999. The revolution taking place in industry today is gross movement of system architecture from copper based backbones to fiber based backbones. XiOptics personnel and the general engineering population realize that these future systems will not be built over the long term on antiquated systems such as Mil-T-29504 and they will not be limited in performance by interconnect designs that are solely dependent upon MT ferrule style solutions. This is mandated because many of the systems under development will be infrastructural in nature for the next 10-20 years. Hence, they must be able to grow as technology continues to unfold.

All of the applications envisioned by XiOptics's designers were scalable in both size and functionality. Market dynamics driving adoption of photonic systems are the implementation of broadband networks, high fiber densities, increasing end-user bandwidth demand and inadequate legacy systems. XiOptics anticipated that new photonic equipment will require dense optical packaging with interconnects meeting the requirements of either/both Telcordia GR-326 (SFF) and GR-1425 (MT Ferrule Product). The XO20 Terminus product by its very nature meets the general requirements of both those specifications. Figure 2 illustrates how XO20 Terminus product meets the requirements of the state-of-the-art optical systems.

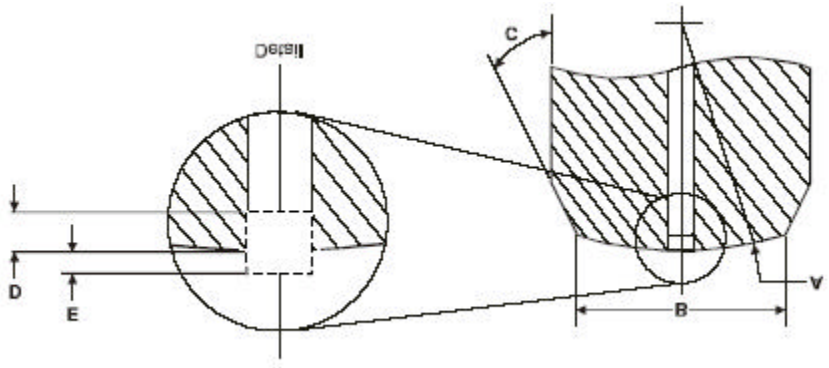

Figure 2: XO20 Terminus Optical Terminus Technology Incorporated Full UPC Polishing Per Telcordia Core GR-326

XiOptics believes the market's need for a cost effective yet robust optical interconnect is a perfect match for the XO20 Terminus technology that has been developed. The flexibility of the basic optical core within allows it to be manufactured at costs which rival current commodity products such as LC or ST yet be packaged in very unique configuration to meet any demanding packaging standard. In addition, the XO20 Terminus product is structured around a common terminus design. Hence, connectors' bodies are designed to function with single mode optics, multi- mode optics and all of the special polish

options available. The XO20 Terminus Series single/multi-mode fiber optic terminus meets the growing needs of high performance, multi-channel fiber optic interconnect systems and exceeds the durability and performance standards previous set by MT ferrule solutions.

When all of this is said an done the ultimate question a system designer asks is “What’s the performance like, at environment?” XiOptics’s XO20 Terminus termius can be said to be the most proven optical performance package on the market today because its foundation can be traced directly to Lucent’s LC connector. The LC connector with over 30 million in service today is guided by requirements found in the TIA/EIA-568B Premise Cabling specification. Over the past 4 years since its introduction the LC interconnect architecture has converted most of its users and proven its all ceramic-ferrule technology. By half sizing existing ceramic components and tightening tolerances the LC offers the lowest insertion loss among SFF connectors at 0.1 dB average. Back-reflection performance is typically greater than 55 dB. The connectors also offer a low standard deviation, which means that optical performance is more consistent due to both internal and external environments.

A typical performance distribution chart for XiOptics’s XO20 Terminus product can be found in Figure 4. This shows how the loss distribution of the tune product is greatly enhanced over untuned competing products.

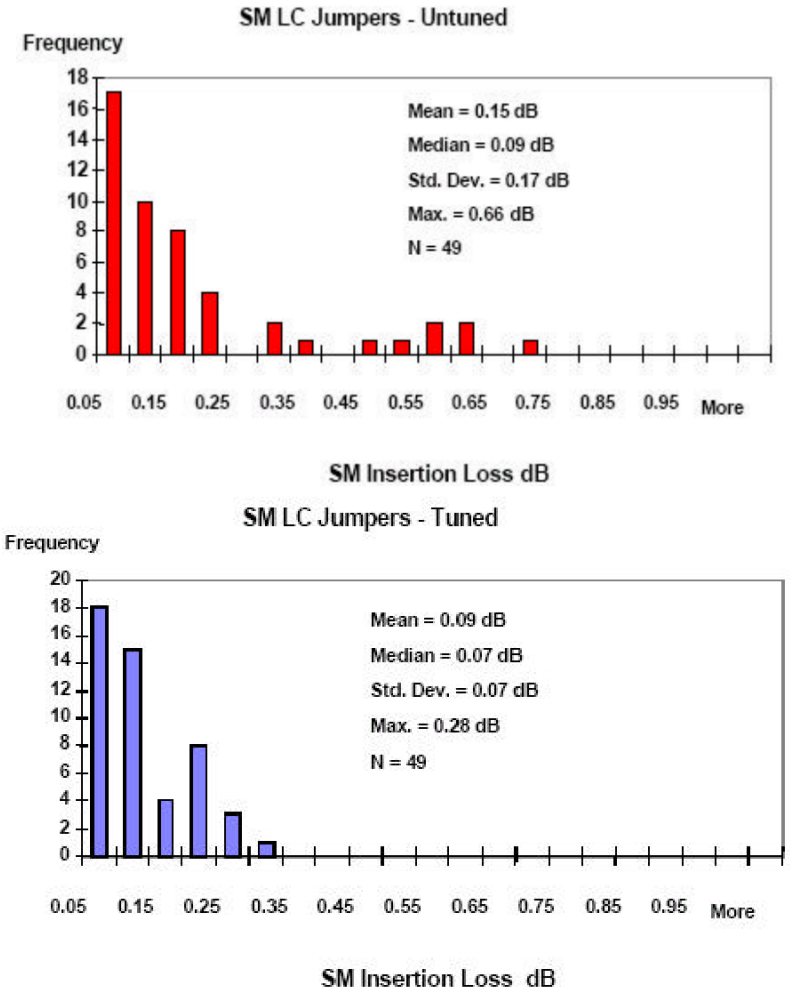

Figure 4: XO20 Terminus Optical Performance Distribution (Single-mode tuned vs untuned)

Low optical insertion loss is becoming even more critical as bandwidth continues to grow and link margins continue to decrease. The key to XiOptics’s XO20 terminus is that when compared to have other multi-channel interconnects its low insertion loss allows more connections in the channel. This allows systems designers to add modularity and flexibility to their

designs. The value to the end customers is built in growth capability in the system and enhanced reparability. XO20 Terminus is the only multi-channels interconnect on the market that provides this flexibility to system designers.

XiOptics's XO20 terminus can deliver high levels of multi-channel single-mode or multi-mode performance because it effectively de-couples the physical limitations present in MT designs or Mil-T-29504. Within a XO20 Terminus optical cavity each channel is allowed to "float" into its alignment sleeve. These precision ground sleeves assure proper alignment and deliver the very low loss performance of the interconnect. Further, each individual component within each channel can be independently serviced without interruption to other adjacent channels. Single terminus can be removed from connector bodies, sleeves can be removed from bodies and bodies can be removed from top level assemblies. Figure 5 is a tabular comparison of XO20 Terminus optical performance.

The XO20 terminus has been designed from its onset to maximize the performance of single-mode compact-core optical fiber. Installation of the fiber into the ferrule/body is accomplished by stripping the acrylate fiber buffer to expose the clad glass. The ferrule and backbody cavities are prepared by injecting a heat curable epoxy into the cavity. The prepared fiber is then installed into the cavity and a cure cycle is initiated to lock the fiber into the terminus assembly. This entire assembly is then loaded into a precision polishing fixture and processed through a multi-stage polishing process that can deliver either Ultra Physcial Contact (UPC) or Angled Physical Contact (APC) interfaces. The polishing process not only delivers a precision physical contact interface for low insertion loss performance but specific dome characteristics assure glass core contact at specific stress levels when coupling is performed using XiOptics's integrated contact spring system. Upon completion of the polishing process the terminus is put through a multi-stage quality inspection and test process. Overall, this assembly methodology assures consistent performance against the specified requirements for the terminus.

Parameter	SM	SM (Tuned)*	MM
Ferrule Type	1.25 mm	1.25 mm	1.25 mm
Fiber Type	SMF 28	SMF 28	62/125
Insertion Loss (dB typ.)	0.15	0.10	0.15
Maximum Loss (dB max.)	0.75	0.20	0.30
Return Loss (dB typ.)	55	56	42
Return Loss (dB min.)	50	50	40

*Tuned performance will only be achieved when mated with a "tuned" product

Figure 5 Optical Performance Summary for XO20 Terminus Systems

Behind the terminus the jacketed optical fiber is reinforced by directly bonding the typical 900 micron fiber jacketing into the terminus body. The guiding design rule used for the fiber optic terminus design is to assure both manufacturing and operating robustness. The use of epoxy fiber retention methods originally developed for severe military environments is used in the XO20 Terminus product. XiOptics specifies a specific epoxy system rated temperatures above 200 C if customers desire to utilize the product at those levels. Since there are no plastics within a XiOptics interconnect solution the product by its very construction can withstand very severe environmental conditions. The secure structural attachment of the fiber jacketing into the terminus body allow ease of handling with assurance that performance and reliability of the link path should be secure across a broad range of environments.

Perhaps one of the most crucial design features of the XO20 terminus is the introduction of the tuning features. These allow for precision alignment of optical waveguide core and significant reduction of the maximum possible, random mate insertion loss. The technology issues regarding this are described above. XiOptics utilizes a patented tuning system to achieve the desire tunability at the individual terminus level. When all of the features of the XiOptics product are combined core within a 60 degree segment is possible. By constraining core offset connector performance variation is minimized. The only other connectors commonly available on the market today that can provide these features are LC, Diamond and some other very

expensive specialty interconnects. The general configuration of the XO20 Terminus optical terminus is shown in Figure 4. As can be seen in the figure, the terminus includes all of the well known features of the general Mil-T-29504 system but enhances its capabilities with several novel patented features.



Figure 4: XO20 Terminus Optical Terminus System with integrated tuning feature

XiOptics's XO20 Terminus product structure was developed and deployed based upon a size 20 optical terminus. This maximized terminus packaging density and allowed direct integration of up to 900 micron buffered optical fiber and specialized terminus adapters allow up to 2 mm optical fiber jackets to be incorporated. All of the XO20 terminus solutions are designed with a common ceramic technology and as discussed above utilize either single mode or multi-mode 125 micron glass. In addition, XiOptics has a ceramic ferrule available for 140 and 80 micron glass fiber but these are not currently in volume production.

In summary, XiOptics believes that the XO20 Terminus optical terminus system has met all of the original design goals of the program. It offers customers an attractive alternative to MT ferrule based product. It provides optical density at the connector matching that of the MT ferrule based products. It provides a cost position far beneath previous multi- channel interconnects products such as Mil-T-29504 optical termini, matches ribbon architecture single mode costs and is competitive with multi-mode ribbon connector costs. Most critical is the flexibility of the terminus to grow with technology or packaging solution and deliver a common optical terminus solution for customers wanting multi-package solutions and very flexible cabling options.

Note: additional information regarding XiOptics's proprietary XO20 Terminus optical terminus system and its method of packaging into interconnect solutions is available from XiOptics upon completion of an intellectual property non- disclosure agreement. This can be attained by contacting XiOptics marketing personnel or through XiOptics's corporate legal representative. Additional information is available at www.xioptics.com.

All material presented in this tutorial is subject to change. Publication with the written permission of XiOptics only.